KEYED NOTES:

1. 4" waste down, 4" vent up through roof.
2. 4" vent up from 3rd level.
3. 1/2" gas up from 3rd level.
4. 1/2" air up from 3rd level.
5. 2-1/2" CW up from 3rd level.
6. 1" hot water up from 3rd level.
7. Not Used
8. 3/4" hot water return down to 3rd level.
9. Balancing valve, set at 1 gpm flow.
10. 3/4" CW down in furring and into back of base cabinet. Route through back of base cabinet to wall hydrant.
11. Wall hydrant, mounted 24" above roof deck, 1/2" lab. air cock mounted 36" above roof deck.
12. Laboratory shut-off gas cock mounted 60" above floor, See Detail

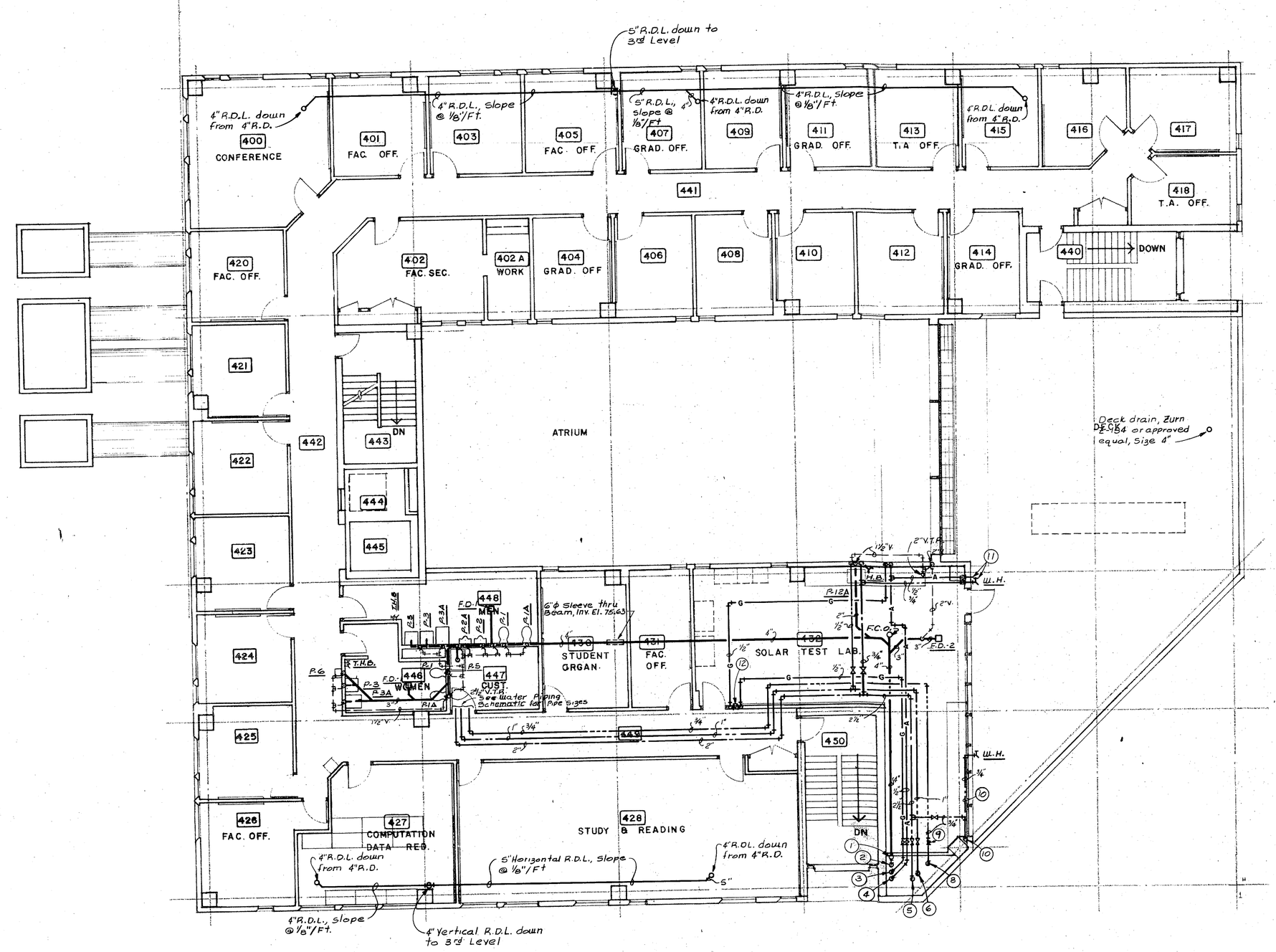

FLOOR PLAN, LEVEL 4, PLUMBING

1/8" = 1'-0"

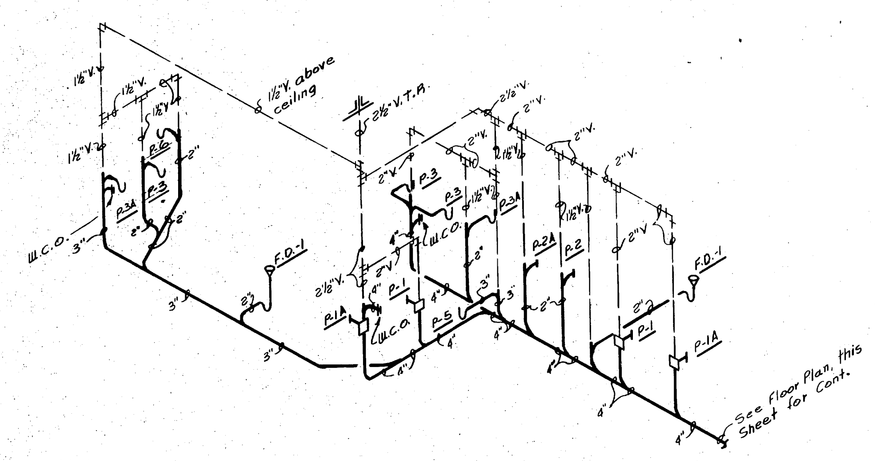

WASTE-VENT PIPING SCHEMATIC, TOILETS 446 & 448

SCALE: NONE

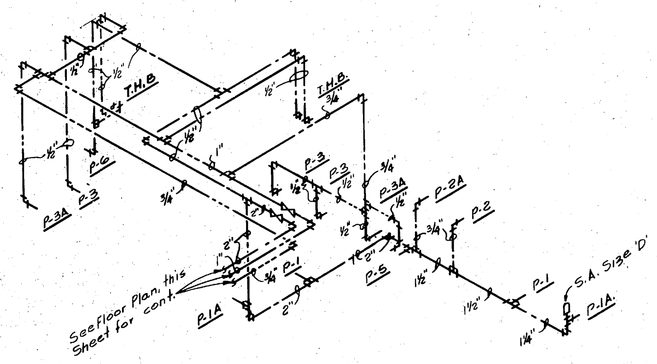

WATER PIPING SCHEMATIC, TOILETS 446 & 448

SCALE: NONE

U.N.M. MECHANICAL ENGINEERING BLDG.

LEVEL 4
PLUMBING PLAN

STATE OF NEW MEXICO — REG. NO. 2341 — JESSE A. PACHECO, JR. — CHARWELL GRAHAM — REG. NO. 3410 — REGISTERED ARCHITECTS

pacheco and graham · architects

project	date	sheet
320/7827	11/20/78	P-5