KEYED NOTES:

1. 4" waste stack.
2. 4" vent stack up from 1st level.
3. 1" gas up to 3rd level from 1st level.
4. 1-1/4" air up to 3rd level from 1st level.
5. 3" CW up from 1st level, 2-1/2" CW up to 3rd level.
6. 2" HW up from 1st level, 1-1/2" HW up to 3rd level.
7. Balancing valve, set @ 1 gpm flow.
8. 3/4" HWR down from 3rd level, 3/4" HWR down to 1st level.
9. 4" waste down from 3rd level.
10. 4" waste down to 1st level.

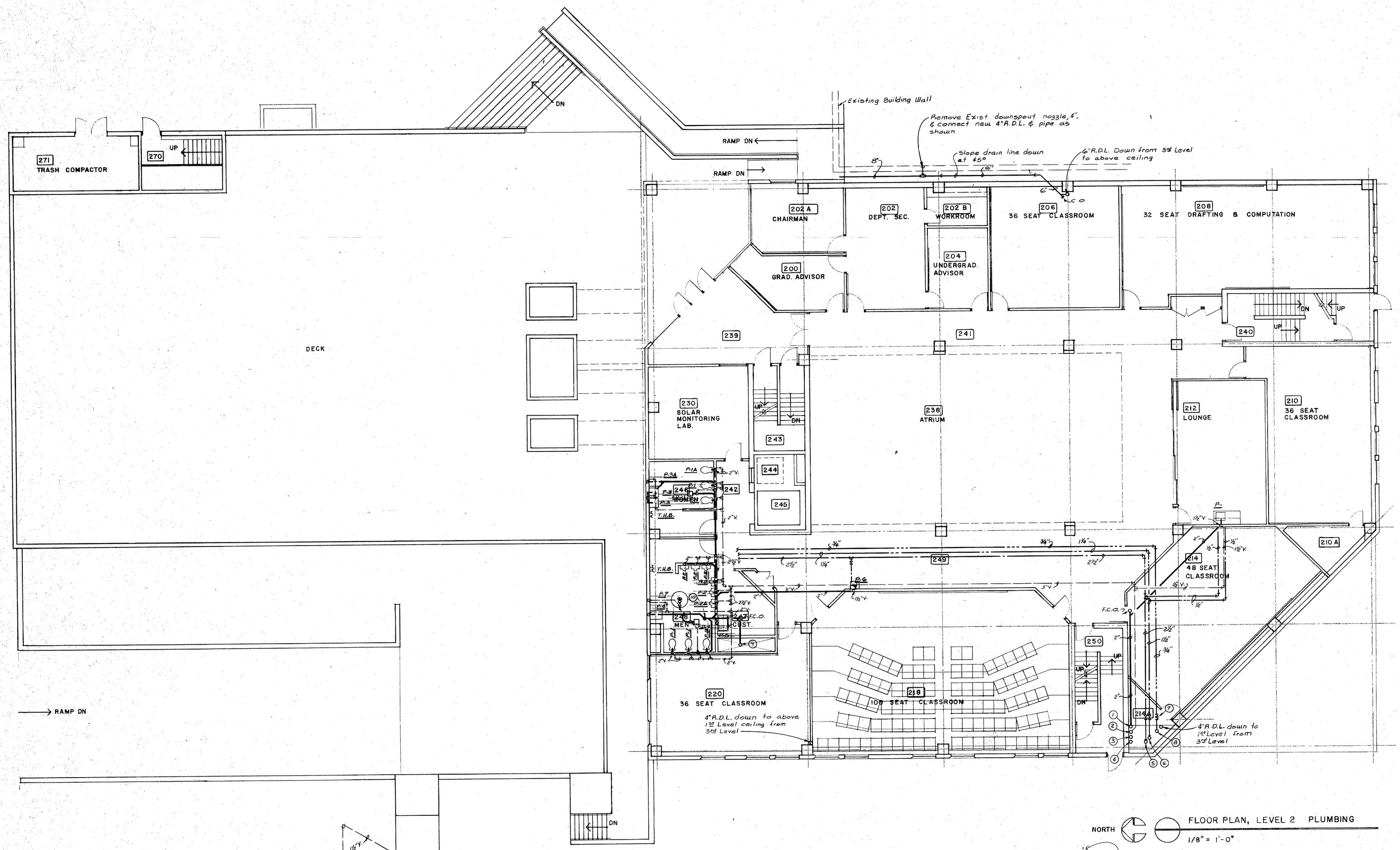

FLOOR PLAN, LEVEL 2 PLUMBING

1/8" = 1'-0"

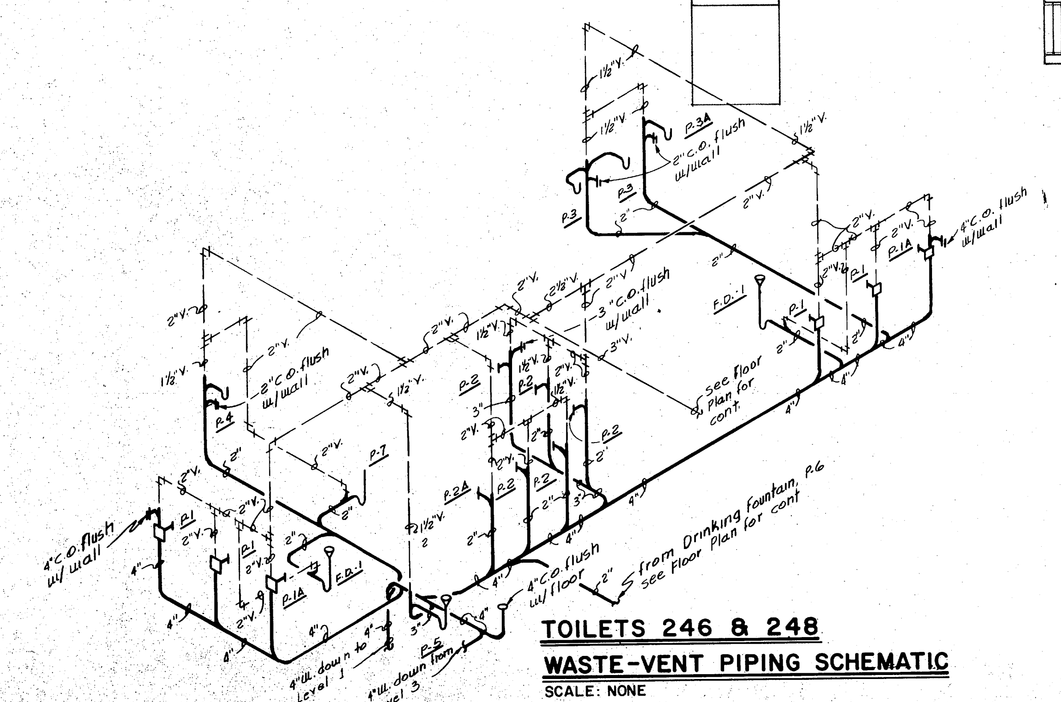

TOILETS 246 & 248

WASTE-VENT PIPING SCHEMATIC

SCALE: NONE

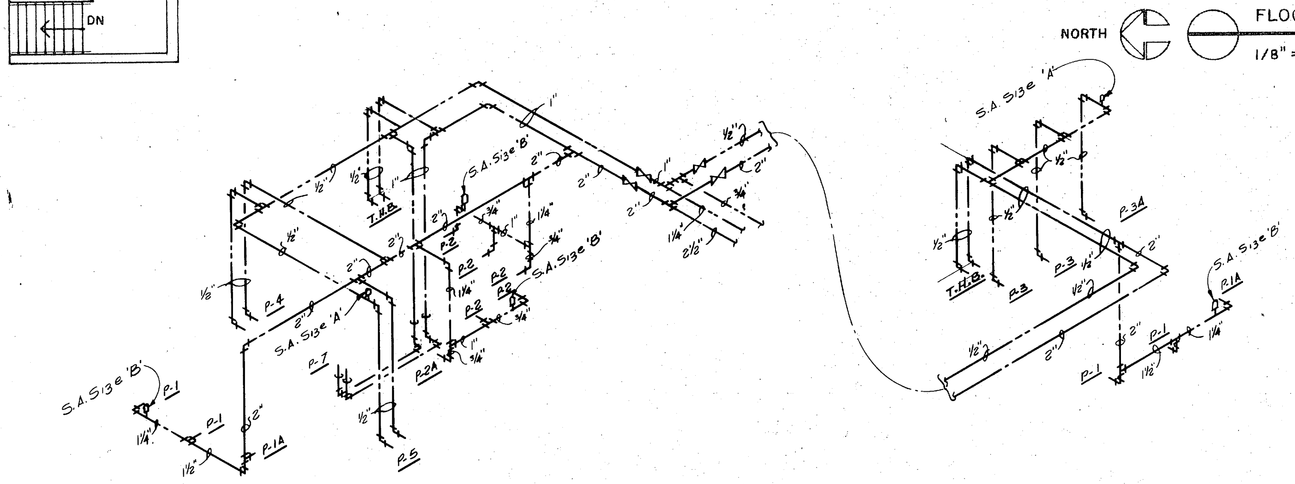

TOILET 248

WATER PIPING SCHEMATIC

SCALE: NONE

TOILET 246

U.N.M. MECHANICAL ENGINEERING BLDG.

LEVEL 2

PLUMBING PLAN

pacheco and graham · architects

project	date	sheet
320/7627	11/20/78	P-3