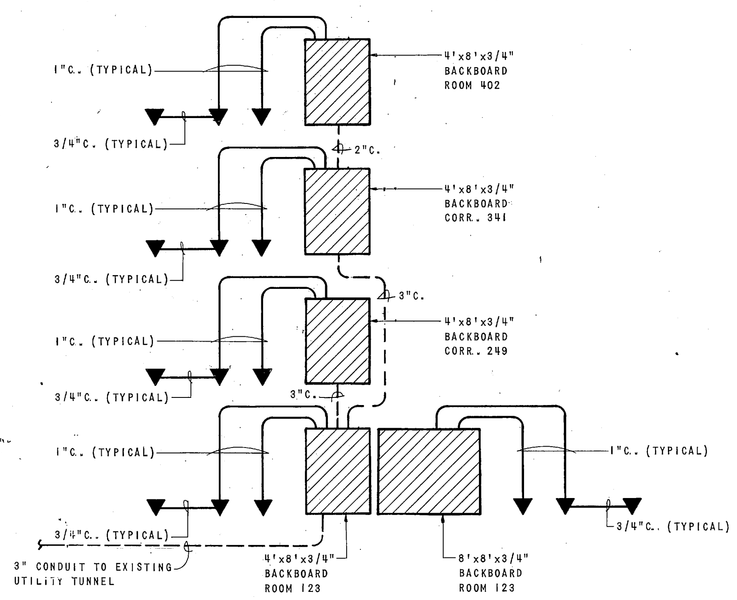

TELEPHONE CONDUIT RISER DIAGRAM
NO SCALE

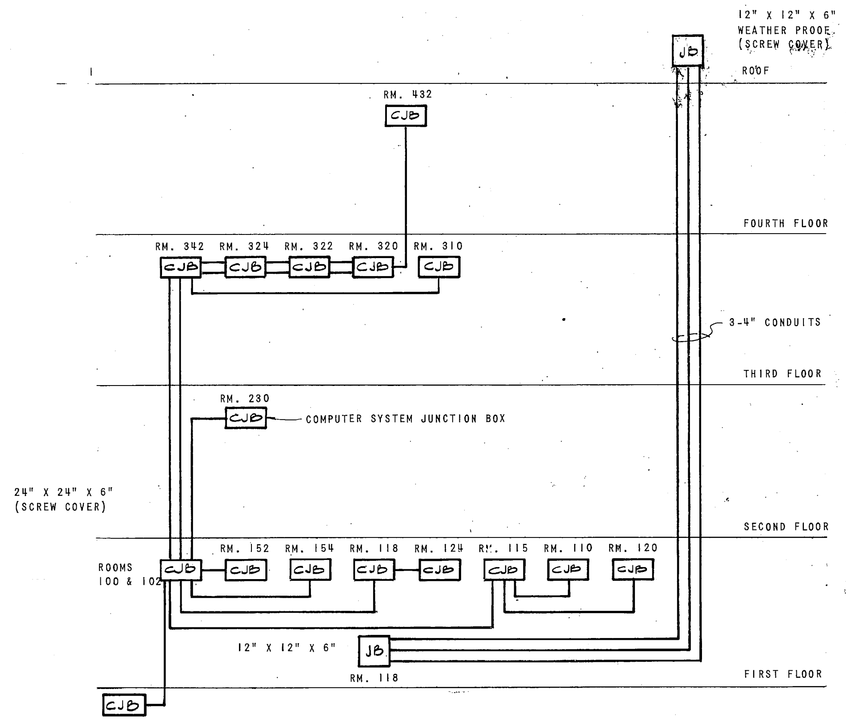

NOTES:
ALL CONDUITS SHALL BE 3" UNLESS OTHERWISE NOTED.
ALL CJB'S SHALL BE 12" X 12" X 6" SCREW COVER UNLESS OTHERWISE NOTED.

COMPUTER SYSTEM CONDUIT RISER DIAGRAM
NO SCALE

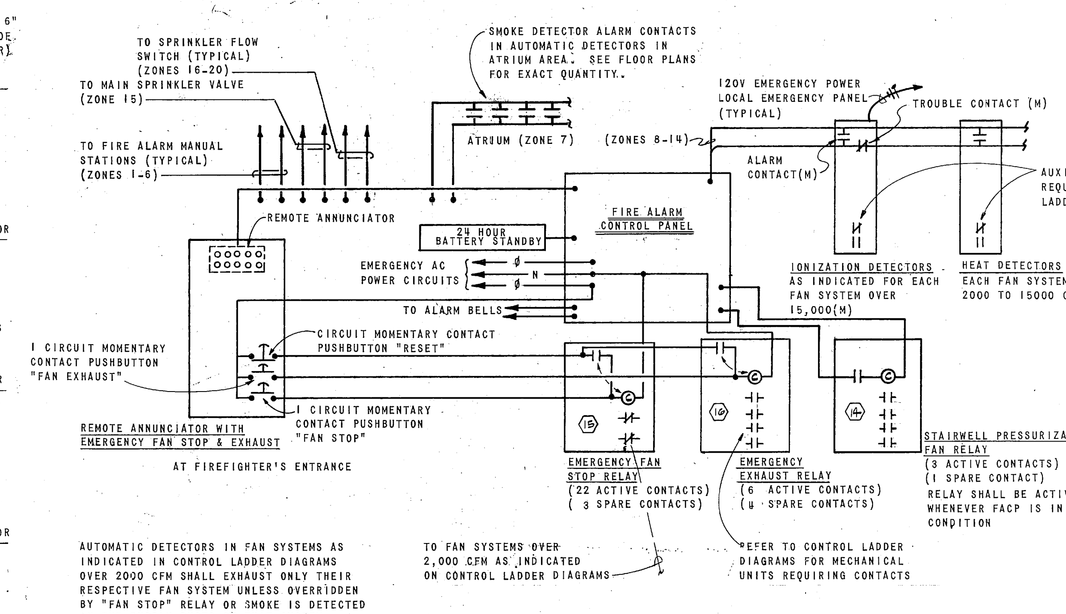

TYPICAL FIRE ALARM CONNECTION DETAIL
NO SCALE

FIRE ALARM ZONE SCHEDULE

	ZONE	DESCRIPTION
	1	BASEMENT MANUAL STATIONS
	2	LEVEL 1 NORTH MANUAL STATIONS
	3	LEVEL 1 SOUTH MANUAL STATIONS
	4	LEVEL 2 MANUAL STATIONS
	5	LEVEL 3 MANUAL STATIONS
	6	LEVEL 4 MANUAL STATIONS
	7	ATRIUM SMOKE DETECTORS
1	8	LEVEL 1 NORTH MECHANICAL SYSTEMS
2	9	LEVEL 1 SOUTH MECHANICAL SYSTEMS
3	10	LEVELS 2, 3, & 4 MECHANICAL SYSTEMS
4	11	ATRIUM MECHANICAL SYSTEMS
5	12	NORTH STAIR FAN
6	13	SOUTH STAIR FAN
7	14	WEST STAIR FAN
8	15	MAIN SPRINKLER FLOW SWITCH AND TAMPER SWITCH
9	16	BASEMENT SPRINKLER SYSTEM
10	17	LEVEL 1 SPRINKLER SYSTEM
10	18	LEVEL 2 SPRINKLER SYSTEM
10	19	LEVEL 3 SPRINKLER SYSTEM
10	20	LEVEL 4 SPRINKLER SYSTEM
	21	SPARE
	22	SPARE
	23	SPARE
	24	SPARE
	25	SPACE
	26	SPACE
	27	SPACE
	28	SPACE
	29	SPACE
	30	SPACE

NOTES

1. CONNECT TO SMOKE DETECTOR (M) IN UNIT 7 AND TO HEAT DETECTORS (M) IN UNITS 18, 36, 37 AND 38.
2. CONNECT TO SMOKE DETECTORS (M) IN UNITS 1 AND 8, AND TO HEAT DETECTORS (M) IN UNITS 4, 5, 10, 11, AND 33.
3. CONNECT TO SMOKE DETECTORS (M) IN UNITS 2 AND 9, AND TO HEAT DETECTORS (M) IN UNITS 3, 5, 34, AND 35.
4. CONNECT TO HEAT DETECTORS (M) IN UNITS 6 AND 19.
5. CONNECT TO SMOKE DETECTOR IN UNIT 12.
6. CONNECT TO SMOKE DETECTOR IN UNIT 15.
7. CONNECT TO SMOKE DETECTOR IN UNIT 17.
8. CONNECT TO MAIN SPRINKLER VALVE LOCATED IN BASEMENT NEAR COLUMN LINE 1C. FLOW SWITCH SHALL ACTIVATE ALARM, AND TAMPER SWITCH SHALL ACTIVATE THE TROUBLE SIGNAL.
9. CONNECT TO BASEMENT SPRINKLER FLOW ALARM LOCATED IN BASEMENT NEAR COLUMN LINE 10.
10. CONNECT TO SPRINKLER FLOW ALARM LOCATED IN PIPE SHAFT NEAR COLUMN LINES 3-H.
11. TWO 3 1/2" CONDUITS. ONE EMPTY WITH PULL WIRE AND ONE CONTAINING 160 RUNS OF BELDON #9770 #22-3 CONDUCTOR SHIELDED CABLES. TERMINATE CONDUCTORS ON TERMINAL STRIPS.
12. TERMINATE CONDUCTORS BETWEEN 2ND LEVEL AND BASEMENT ON CORRESPONDING TERMINALS IN EACH TERMINAL CABINETS.
13. TWO 1" CONDUITS. ONE EMPTY WITH PULL WIRE AND ONE CONTAINING 10 RUNS OF BELDON #9770 #22-3 CONDUCTOR SHIELDED CABLES. TERMINATE CONDUCTORS ON TERMINAL STRIPS. SEE NOTE 12.
14. ACTIVE COSTACTS SHALL CONTROL MECHANICAL UNITS: 12, 15, & 17.
15. ACTIVE CONTACTS SHALL CONTROL MECHANICAL UNITS: 1 THRU 12, 15, 17 THRU 19, & 33 THRU 38.
16. ACTIVE CONTACTS SHALL CONTROL MECHANICAL UNITS: 1, 2, 6, 19, AND TWO MECHANICAL EP SWITCHES.
17. PROVIDE CONDUIT KNOCKOUTS IN CABINETS FOR FUTURE MONITOR WIRING.

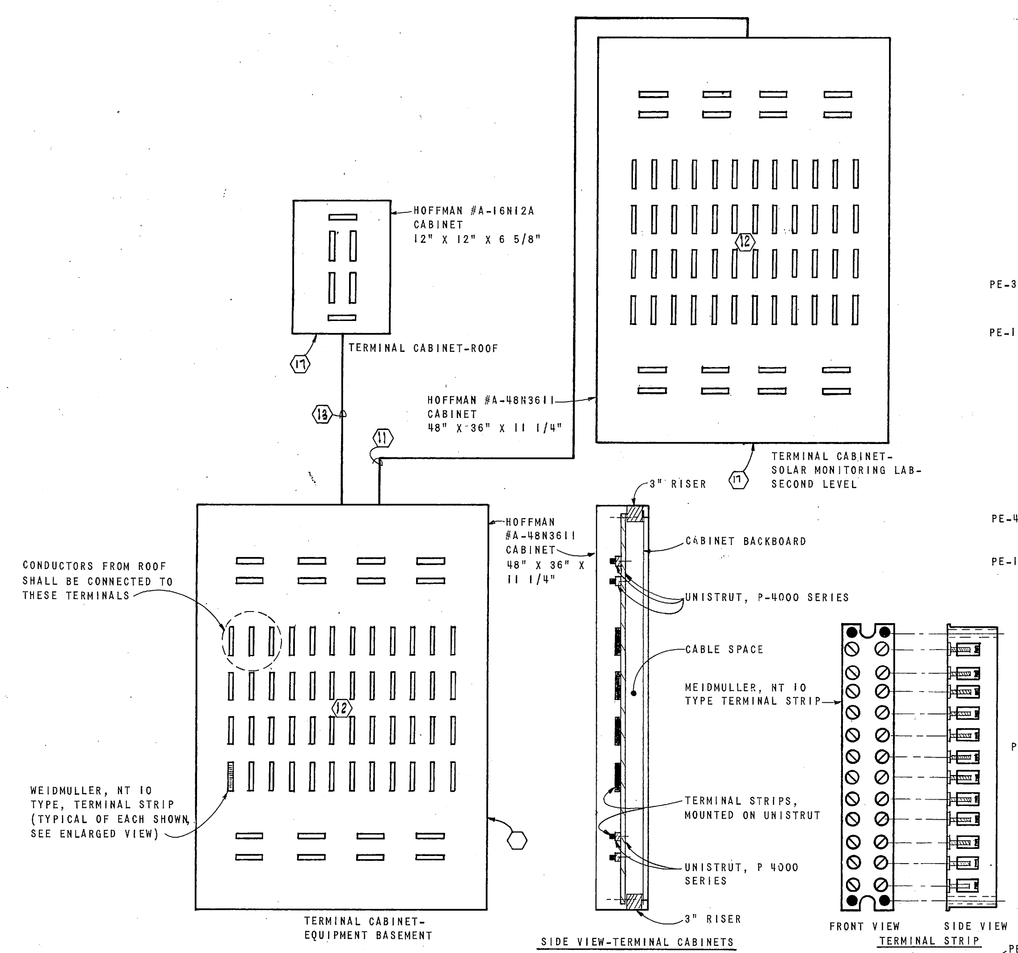

MONITORING TERMINAL CABINET & WIRING DETAIL
NO SCALE

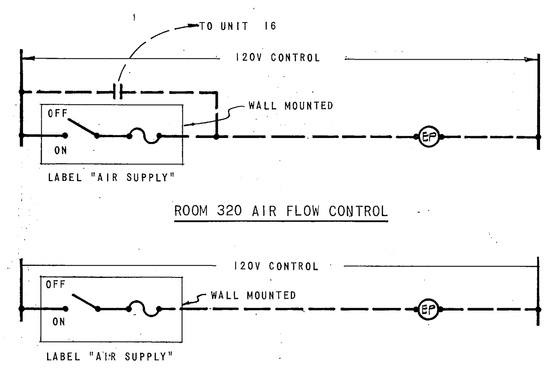

ROOM 320 AIR FLOW CONTROL

DESIGN LAB AIR FLOW CONTROL
ROOMS 323 & 322

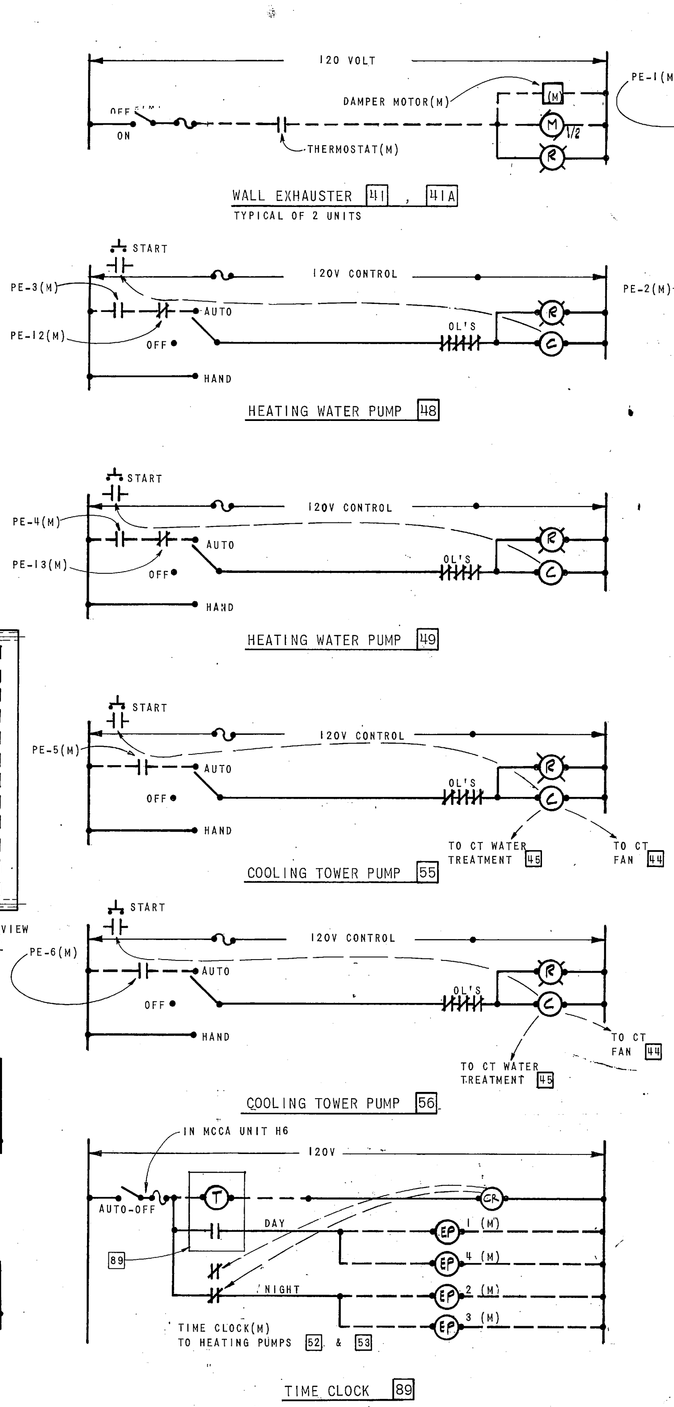

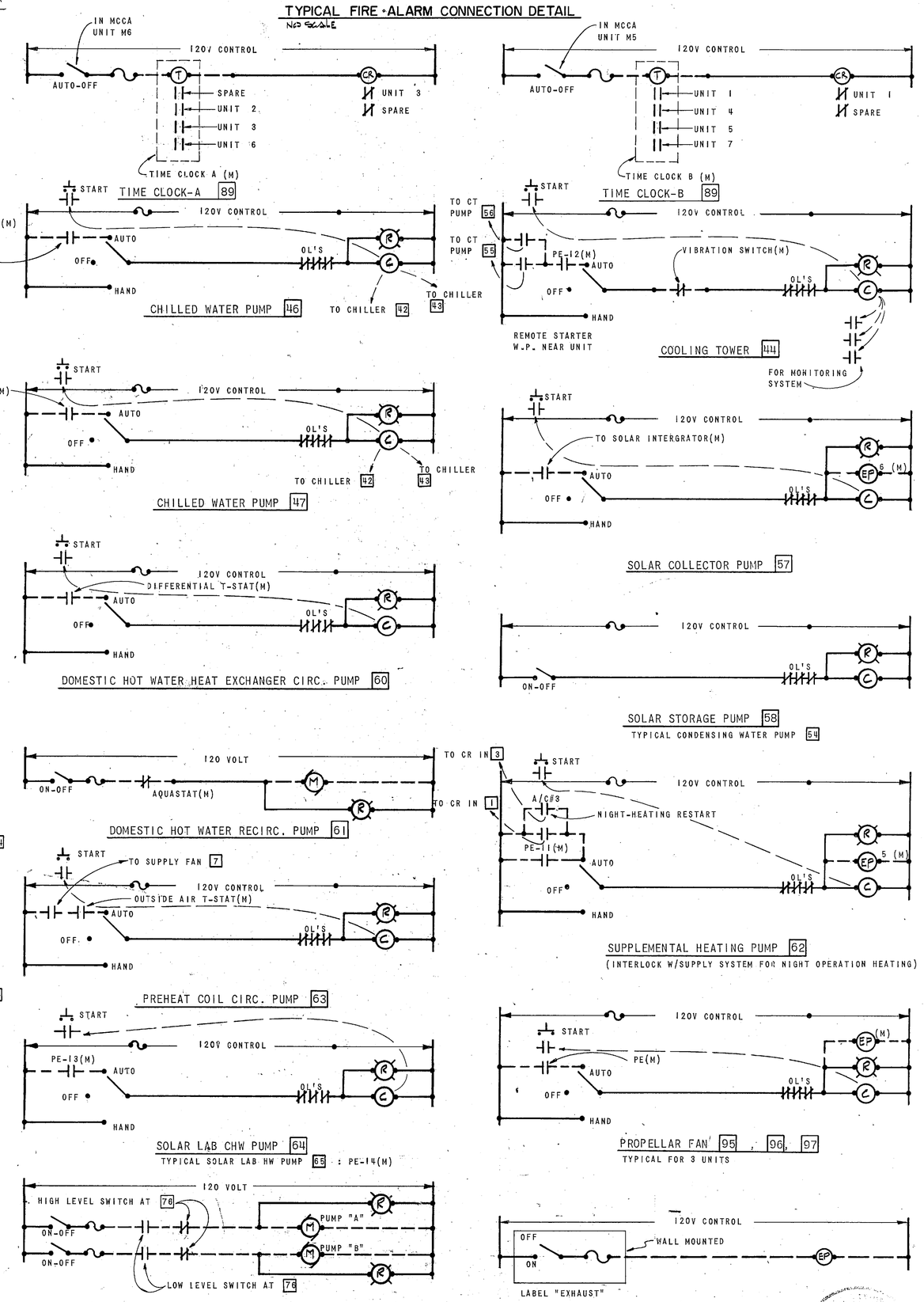

CONTROL LADDER DIAGRAMS
NO SCALE

U.N.M. MECHANICAL ENGINEERING BLDG.
CONTROL LADDER DIAGRAMS AND POWER RISER DIAGRAM

pacheco and graham · architects

project	date	sheet
320/7627	11/20/78	E-12