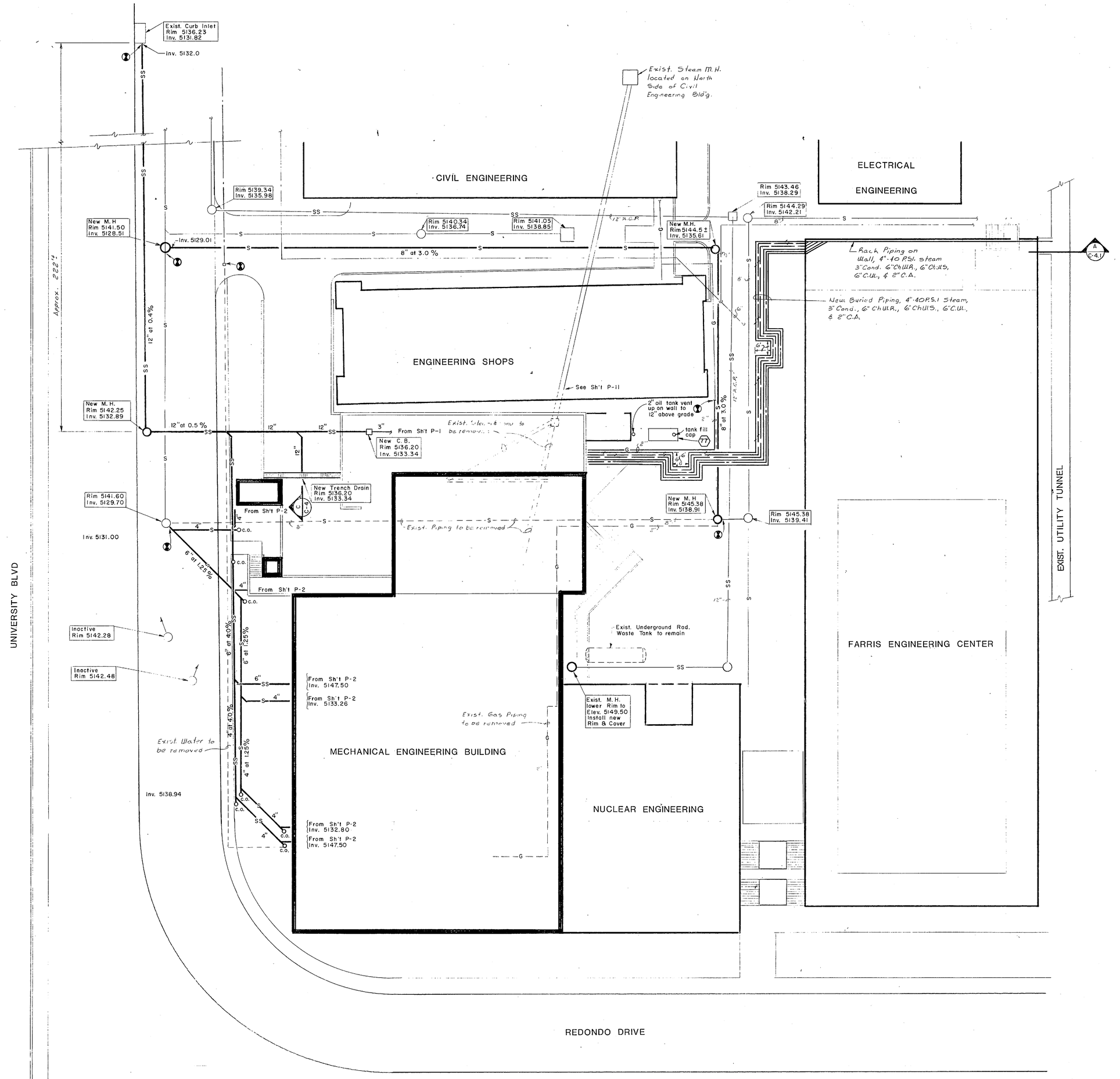

SITE PLAN 1" : 20'

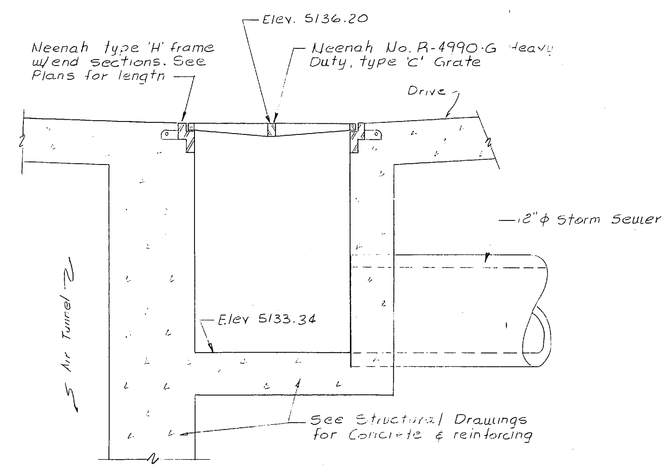

SECTION C 1" : 1' 0"

U.N.M. MECHANICAL ENGINEERING BLDG.

UTILITIES PLAN - BASE BID

pacheco and graham · architects

project date sheet

11/20/78 C-4